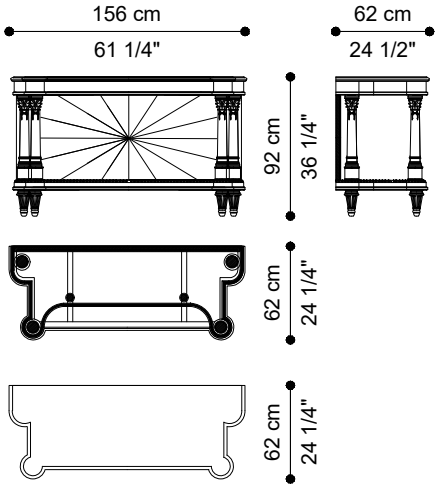
156 cm
61 1/4"
62 cm
24 1/2"
92 cm
36 1/4"
62 cm
24 1/4"
62 cm
24 1/4"