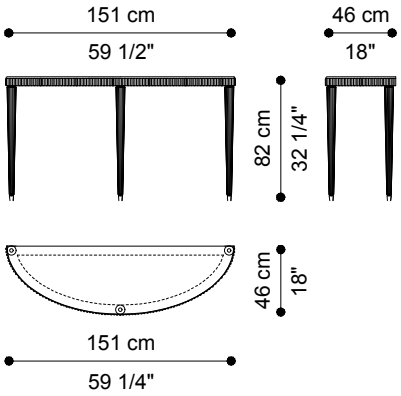
151 cm
59 1/2"
46 cm
18"
82 cm
32 1/4"
46 cm
18"
151 cm
59 1/4"